GAGGENAU

Controls on top

Right-hinged

BM 450 710

Stainless steel-backed full glass door

Width 24" (60 cm)

Left-hinged

BM 451 710

Stainless steel-backed full glass door

Width 24" (60 cm)

Included accessories

1 combination wire rack

1 glass tray

400 series Combi-microwave oven

BM 450/BM 451

- Handleless door/automatic door opening
- Single operation and combination of microwave, grill and oven
- Sequential operation of up to five modes including programming of combined operation and rest time
- TFT touch display
- Centralized controls for easy use and intuitive operation
- Electronic temperature control
- Net volume 1.3 cu.ft.

Cooking modes and programs

Microwave operation with 5 output levels: 1000, 600, 360, 180, 90 W.

Oven operation with 4 heating modes:

- Convection at 100°F and from 210°F – 480°F.
- Broil + convection from 210°F – 480°F.
- Broil + circulated air 210°F – 480°F.
- Broil with 3 levels of intensity, maximum output of 2000 W.

Heating modes with microwave output levels 600, 360, 180 and 90 W, freely combinable.

15 automatic programs with weight indication, fully customizable:

- 4 defrosting programs.
- 4 cooking programs.
- 7 combination programs.

Option to save individual recipes.

Sabbath mode with constant temperature of 185°F.

Operation

Automatic door opening.

Rotary knobs and TFT touch display operation.

Clear text display in 25 languages.

Information key with use indicators.

Side-opening door opens up to 180° angle.

Features

Innowave.

Fast heating setting.

4 rack levels.

Actual temperature display.

2x 60 W halogen light (one on each side).

Safety

Thermally insulated door with triple glazing.

Triple door lock.

Child lock.

Safety shut-off.

Cooled housing with temperature protection.

Cleaning

Hygienic stainless steel interior with glass ceramic base.

Interior back wall with catalytic coating.

Planning notes

Door hinge not reversible.

Plan the cut-out without back wall.

The front of the appliance extends 1⅞" from the cabinet front.

Consider the overhang when planning to open drawers next to the appliance.

When planning a corner solution, pay attention to the 110° door opening angle.

The electrical outlet needs to be planned outside of the cut-out.

The Combi-microwave oven may not be installed less than 36" (916mm) from the floor in Canada.

Rating

Total rating 3,100 W.

Total Amps: 20 A (Double pole 20 amp breaker required).

120/208 – 240V, 60Hz (4 Wire)

Plan for a 71" connection cable without a plug (hardwire required).

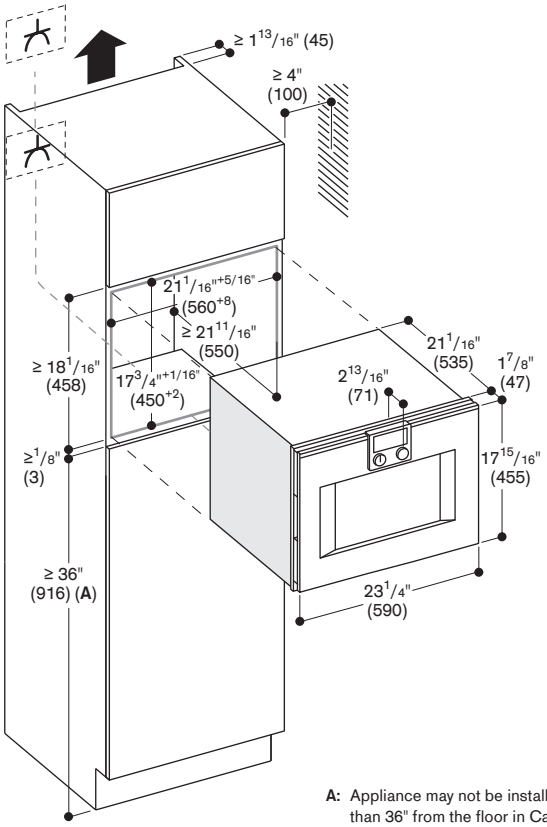

A: Appliance may not be installed less than 36" from the floor in Canada.

Outlet

Side view of BM 450/451 over BO oven

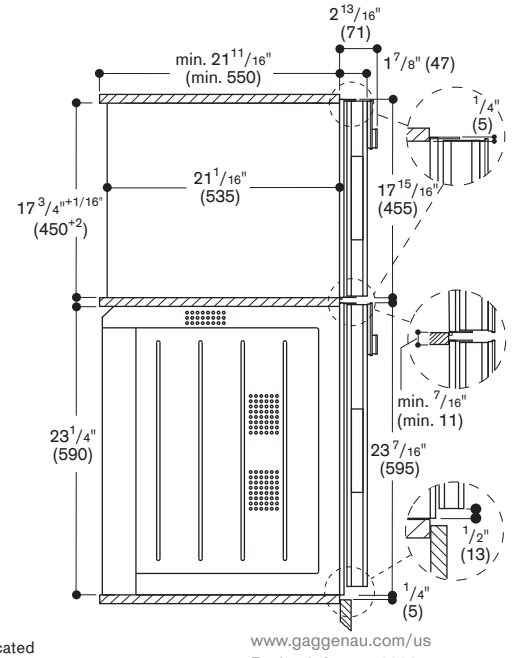

Numbers indicated inside parenthesis ( ) = mm

www.gaggenau.com/us

Revised: August 2022